CHEMICAL ENGINEERING TRANSACTIONS

VOL. 61, 2017

A publication of AIDIC
The Italian Association of Chemical Engineering
Online at www.aidic.it/cet

Guest Editors: Petar S Varbanov, Rongxin Su, Hon Loong Lam, Xia Liu, Jiří J Klemeš
Copyright © 2017, AIDIC Servizi S.r.l.
ISBN 978-88-95608-51-8; **ISSN** 2283-9216

DOI: 10.3303/CET1761272

An Experimental-Based Energy Integrated Process for Biodiesel Production from Waste Cooking Oil Using Supercritical Methanol

Omar Aboelazayem[a,b,*], Mamdouh Gadalla[a], Basudeb Saha[b]

[a]Department of Chemical Engineering, The British University in Egypt, Misr-Ismailia Road, El-Sherouk City 11837, Cairo Egypt
[b]School of Engineering, London South Bank University, 103 Borough Road, London, SE1 0AA, UK
aboelazo@lsbu.ac.uk

Biodiesel has been recognised as one of the effective, green, renewable and sustainable fuels. It is derived from renewable living resources either animal fats or vegetable oils. Biodiesel production in the absence of catalyst using supercritical methanol has recently been receiving significant attention. Non-catalytic transesterification reaction eliminates the difficulties of catalyst preparation and separation processes. Although it has shown high conversion for the reactants with relatively short reaction time in comparison with the conventional catalytic transesterification processes, it has some disadvantages including higher reaction temperature and pressure, large excess of methanol to oil (M:O) molar ratio and higher energy consumption. In an attempt to mitigate these problems, an experimental study followed by process design/integration for biodiesel production from waste cooking oil (WCO) has been performed. A low-quality WCO collected from local restaurants has been selected as a feedstock for the reaction. The experimental phase of the transesterification reaction together with an optimisation procedure resulted in the optimised conditions of M:O molar ratio of 37:1, reaction temperature of 253.5 ^{o}C, reaction pressure of 198.5 bar in 14.8 min. The maximum yield was 91%. In addition, kinetics of the reaction has been studied concluding an irreversible pseudo first order reaction with a reaction rate constant of 0.0006 s^{-1}. Moreover, thermodynamics of the reaction has been studied at a temperature range of 240 - 270 ^{o}C with resulting frequency factor and activation energy of 4.05 s^{-1} and 50.5 kJ/mol. A kinetic reactor has been simulated using the experimentally determined kinetic and thermodynamic data. The enthalpy content of the reactor product stream has been used to separate most of the unreacted methanol in an adiabatic flash drum. Finally, a scheme has been developed for an energy integrated process in order to maximise the heat recovery. Energy savings resulted from the developed heat exchanger network (HEN) have been concluded as 32.2 % and 23.8 % for both heating and cooling energies respectively, in comparison with an existing process energy requirements in the literature. The amount of heat exchanged for each unit has been determined in addition to composition, temperature and pressure of the streams. Vacuum distillation column has been designed to separate the unreacted triglycerides from biodiesel in order to fulfil the quality restrictions of the final biodiesel product.

1. Introduction

The incitements from the instability of petroleum prices, diminishing of petroleum reserves and environmental concerns about the emissions of petroleum based fuels have prompted the research on energy production from alternative renewable resources. Biodiesel has been recognised as one of the green, renewable and sustainable fuels. It is a clean fuel derived from either animal fats or vegetable oils. Biodiesel has the following advantages over diesel fuel: it produces less smoke, carbon monoxide, hydrocarbons and particulates, it is biodegradable and nontoxic, it provides better performance in engine lubricity. Moreover, biodiesel combustion exhaust is free of sulphur and aromatics. Transesterification reaction is the most commonly used technique for biodiesel production. This reaction includes acidic and basic catalysed processes for biodiesel production. Quality of the

Please cite this article as: Aboelazayem O., Gadalla M., Saha B., 2017, An experimental-based energy integrated process for biodiesel production from waste cooking oil using supercritical methanol, Chemical Engineering Transactions, 61, 1645-1650
DOI:10.3303/CET1761272

feedstock is considered as the main factor affecting the selection of the production techniques. (Acedevo et al, 2016).

1.1 Catalysed production processes

Homogenous basic catalytic process has been recognised as the most commonly used technique for biodiesel production. However, it requires high quality feedstock with low total acid number. High concentration of free fatty acids (FFA) in the feedstock is leading to saponification side reaction which leads to decrease the yield of the produced biodiesel.

Heterogeneous basic catalyst has been proposed as a solution for total acid value restrictions for the feedstock. It also reduces the catalyst separation cost and it operates the reaction within similar conditions to the homogenous catalysed process with similar results. However, it requires very low water concentration of the feedstock due to its sensitivity.

Acidic catalysed processes could be considered as an effective technique for low quality feedstock with high total acid value. However, their reaction is relatively slow compared to the base catalysed processes (Wen et al, 2009).

1.2 Non-catalysed production process

Supercritical fluid technology has significant influence in developing and upgrading several industrial processes. This contribution has illustrated new and advanced techniques for chemical and physical processes including the development of greener and sustainable processes (Wen et al, 2009).

The non-catalytic production of biodiesel using supercritical methanol has been considered as an alternative process. This process tolerates transesterification of triglycerides in parallel with esterification of free fatty acids present in the feedstock. Saka and Kusdiana (2001) reported that biodiesel could be produced with 95 % yield within 2 min at 350 ^{o}C, 450 bar and 42:1 M:O molar ratio.

In the present work, Response Surface Methodology (RSM) using Box-Bhneken Design (BBD) has been used to optimise the number of experiments, to analyse the effect of each reaction variable and to illustrate the effect of variables interaction on the reaction response. Analysis of variance (ANOVA) has been used to evaluate the significance of the predicted model and the reaction variables. Numerical optimisation has been used to optimise the reaction variables within specified targets. Kinetics of the overall reaction has been studied concluding kinetic and thermodynamic data of the reaction. Kinetic reactor representing the reaction has been simulated using the concluded kinetic data. A large-scale process for biodiesel production has been simulated by adding the kinetic reactor. Energy integration has been applied for the process for optimising the cooling and heating energies required for the process.

2. Materials and methods

2.1 Chemicals used

WCO was supplied by Uptown Biodiesel Ltd., UK. Methanol 99 % was purchased from Fisher Scientific, UK. The standard methyl esters used for preparing calibration curves were purchased from Sigma-Aldrich, UK. Liquid CO_2 cylinder (99.9%) equipped with a dip tube was purchased from BOC Ltd., UK.

2.2 Experimental setup

The experimental procedures were adopted as a modification of the experimental work which has been previously reported by Ghoreishi and Moein (2013). WCO was filtered in order to separate the remaining suspended solids from the cooking process. The supercritical methanol reaction was carried out in a 100-mL high pressure reactor made of stainless steel (model 9590, Parr Instrument Company, USA), which was fitted with a thermocouple (type J), heating mantle, controller (model 4848) and a mechanical stirrer. The WCO and MeOH with specific molar ratio were added to the reactor then heating the reactor with continuous stirring at 300 rpm to the required temperature. A supercritical fluid pump (model SFT-10, Analytix Ltd., UK) was used to compress CO_2 from the cylinder to the reactor with the specified pressure. The reaction time was started when the reactor reached the specified temperature and pressure. After reaction time, the reactor was quenched using an ice bath to stop the reaction. Then, the reactor was depressurised and the products were separated to biodiesel and glycerol using a centrifuge (1,500 rpm, 3 min per cycle). The separated biodiesel was heated to 80 ^{o}C for 30 min to separate the unreacted MeOH using simple distillation. The biodiesel yield has been calculated using Eq(1).

$$Biodiesel\ Yield = \frac{mass\ of\ biodiesel\ produced}{mass\ of\ WCO\ used} * 100 \quad (1)$$

2.3 Experimental design

RSM has been developed to conclude the optimum conditions for biodiesel production by analysing the relationship between reaction response and reaction variables, Four independent variables have been identified including: M:O molar ratio, temperature, pressure and time, which have been labelled as A,B, C and D, respectively. Three levels have been coded by -1, 0 and 1 as shown in Table 1. Twenty-nine runs have been performed in a randomised way and for each run the response variable (biodiesel yield) has been calculated. The levels mentioned in Table 1 represent the range of the independent variables where the experiments have been performed within the specified range. Accordingly, any further conclusions for the effect of these independent variables would be valid only within the specified range.

Table 1: Experimental design variables

Variable	Code	Levels		
		-1	0	1
M:O (molar ratio)	A	20	31	42
Temperature (ºC)	B	240	260	280
Pressure (bar)	C	180	220	260
Time (min)	D	12	22	32

2.4 Statistical analysis

The generated model has been defined using the general quadratic equation. Investigation of the statistical significance of the model, reaction variables and the interactions between the variables has been analysed using ANOVA by calculating Fisher's F-test at 95% confidence level. Numerical optimisation of the reaction variables has been targeted maximising the reaction response while minimising reaction temperature, pressure and time. Design of experiments, regression analysis and numerical optimisation has been performed using Design Expert 10 software (Stat-Ease Inc., Minneapolis, MN, USA).

2.5 Reaction kinetics

Kinetics of the overall transesterification reaction has been analysed based on specific reaction conditions. These conditions include irreversible reaction, constant MeOH concentration (presence of large excess of MeOH) and ignoring glycerol-methanol side reaction.

2.6 Process Design

Aspen HYSYS simulation programme version 8.8 has been used for simulating the biodiesel process (Aspen Technology Inc., USA). WCO used as a feed stock has been represented by triolien ($C_{57}H_{104}O_6$) component from HYSYS component library as it is the main component of the feedstock. Accordingly, methyl oleate ($C_{19}H_{36}O_2$) has been considered as the product of the reaction. According to the low total acid value of the feedstock, esterification reaction of the free fatty acids (FFA) has been ignored for reaction simplicity. Continuous stirred tank reactor (CSTR) has been chosen to represent the reactor. Conversion reactor used in most of the process deigns in the literature has been replaced by kinetic reactor. Kinetic and thermodynamic data required for the kinetic reactor i.e. activation energy (E) and Arrhenius constant (A), has been calculated from the experimental work of this study.

Non-random two liquid (NRTL) thermodynamic model has been used as the fluid package for the process simulation since the reaction includes polar components i.e. methanol and glycerol. The missing binary interaction parameters in the simulator data bank have been estimated using UNIFAC vapour-liquid and liquid-liquid equilibrium methods. Since NRTL activity model is not efficient for high pressure and temperature separation processes, Peng Robinson equation of state has been used for the product separation processes. The biodiesel plant capacity has been specified by 8,850 kg/h of WCO feed and 835 kg/h of fresh MeOH feed (Lee et al, 2011).

3. Results and discussion

3.1 Statistical analysis

After performing 29 runs generated by RSM and calculating the response variable for each run, Design Expert software generated a regression model representing an empirical relationship between reaction response and reaction variables. The polynomial model as shown in Eq(2) has been used for fitting the experimental results where Y represents the response variable (biodiesel yield); A, B, C and D represent the independent variables of M:O molar ratio, temperature, pressure and time.

ANOVA has been used to examine the adequacy of the RSM model using F-value and p-value tests which have been concluded to 65.4 and <0.0001. The ANOVA tests results have proven that the developed quadratic model is statistically significant with 95 % confidence level.

$$Y = 94.2 + 4.08\,A + 3.17\,B + 1.42\,C + 0.50\,D - 0.25\,AC - 0.50\,AD - 0.50\,BD - 3.77\,A^2 - 4.14\,B^2 - 3.77\,C^2 - 3.14\,D^2 \quad (2)$$

3.2 Optimisation of reaction variables

Numerical optimisation of the reaction has been carried out to conclude the optimum values for reaction variables for biodiesel production. Targets of the reaction variables have been set based on environmental and economic concerns. Temperature, pressure and time have been targeted to be minimised due to their huge consumption of energy. Reaction response has been targeted to be maximised. The numerical optimisation concluded that the maximum biodiesel yield that can be achieved at minimum reaction variables is 91 % at M:O molar ratio of 37:1 at 253.5 ^{o}C, 198.5 bar and 14.8 min.

The predicted optimum conditions have been experimentally validated showing similar response of 91.5 % biodiesel yield. This result has validated the predicted model with 0.54% relative error from the experimental data.

3.3 Reaction kinetics

The validated quadratic model has been used for predicting the required experimental results for kinetic calculations. The required kinetic data have been studied between the temperature range 240 ^{o}C and 280 ^{o}C and reaction time from 12 to 20 min. The reaction has been considered to be pseudo first order reaction which has been proven experimentally when plotting the experimental results with the first order equation, it concluded straight line. From the determined graph, the reaction rate constant has been calculated to be 0.000,6 s^{-1}. Using Arrhenius equation for thermodynamic calculations, activation energy and Arrhenius constants has been calculated to be 50.5 kJ/mol and 4.05 s^{-1}.

3.4 Reactor simulation

HYSYS simulation programme has been used to simulate the biodiesel reactor at the concluded optimal conditions. Transesterification reaction of triolien has been introduced to the simulator using the balanced stoichiometric reaction coefficients. Reaction kinetic and thermodynamic data i.e. activation energy and Arrhenius constant, have been identified from the experimental results. The molar ratio of M:O has been considered by identifying the molar flow of triolien by 10 kmol/h, while methanol flow rate has been identified by 370 kmol/h resulting in mixture stream of 380 kmol/h. Temperature and pressure have been identified based on the optimum concluded conditions as 253 ^{o}C and 199 bar.

The kinetic reactor has simulated the reaction at the optimum conditions resulting in 91.7 % conversion of triolien. However, the experimental results at the optimum conditions show 91.5 % conversion of triolien. These results show that the relative error between the simulation and the experimental data is 0.2%. The kinetic reactor results proved the accuracy of the kinetic calculations and the adequacy of the predicted model.

3.5 Process simulation

Biodiesel production process with supercritical methanol consists of four main steps: pressurising and heating of reactants, transesterification reaction, unreacted methanol recovery and biodiesel purification. Lee et al. (2011) have simulated a process for biodiesel production from WCO using supercritical methanol. They have used plug flow reactor (PFR) to represent the reaction. In this study, similar process scheme has been developed with minor modification as shown in Figure 1.

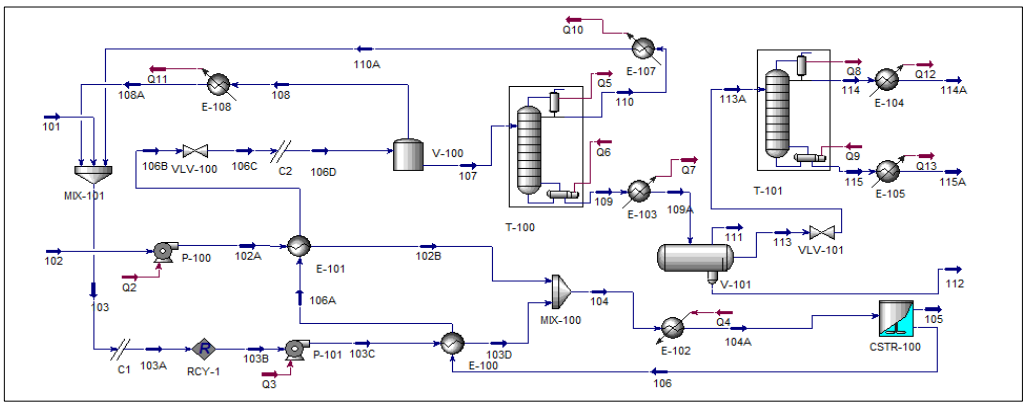

Figure 1: Process flow diagram (PFD) for biodiesel production

Table 2: Stream table for the designed process

Name	101	102	104	106	107	109	112	113	114A	115A
Temperature (°C)	25	25	168	222.9	69.78	160.2	25	25	25	25
Pressure [kPa]	100	100	19850	19840	100	100	100	100	101	101
Molar Flow [kmol/h]	27.54	10	380	380	78.15	39.75	9.586	30.16	27.25	2.914
Mass Flow [kg/h]	882.4	8854	20710	20711	11038	9807	857.7	8950	7597	1352
Liquid Volume Flow [m^3/h]	1.108	9.666	24.56	24.56	12.41	10.86	0.686	10.17	8.670	1.506
Mole fractions										
Triolien	0	1	0.026	0.002	0.010	0.020	8	0.027	0	0.951
Methanol	1	0	0.973	0.901	0.520	0.056	0.043	0.06	0.066	0
M-Oleate	0	0	0	0.072	0.352	0.692	0	0.912	0.933	0.048
Glycerol	0	0	0	0.024	0.117	0.230	0.956	0	0	0

3.6 Process Integration

Energy consumption comparison between the developed process without any heat exchanger (original process), designed process based on literature as simulated by Lee et al, (2011) and the new energy integrated process has been developed showing the effect of integration in minimising the energy consumption. Using Aspen Energy Analyzer® V8.8 programme energy analysis using composite curve, as shown in Figure 2, has been applied for the literature based process showing the amount of energy that could be integrated either for cold or hot streams.

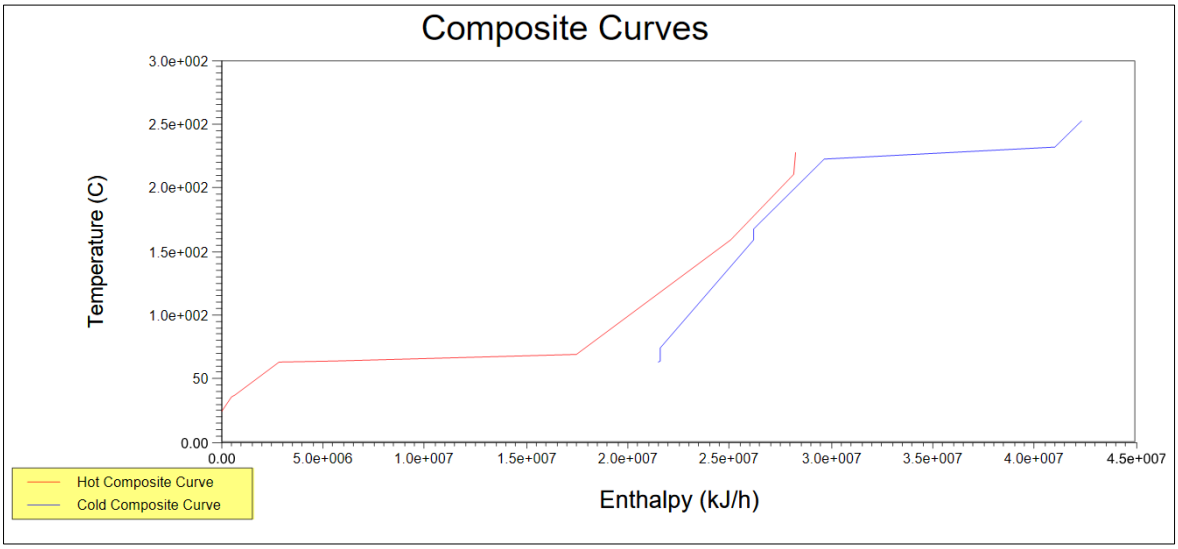

Figure 2: Composite Curves for the biodiesel production process

In the composite curves, the streams overlapping together show the quantity of energy that could be integrated through the process. (Farrag et al, 2016). It is clearly shown in Figure 2 that further integration would be achieved with total integrated energy of 6.75x10^6 kJ/g. The integrated energy targets for heating (Q_h) and cooling (Q_c) using external utilities have been found to be 1.408x10^7 kJ/h and 2.156x10^7 kJ/h, respectively. A minimum value of 10 °C has been selected for integration since this value has been commonly used in most of the chemical and petrochemical plants. The Pinch temperatures have been concluded to be 168 °C and 178 °C for both cold and hot streams. HEN has been designed in order to integrate the process based on Pinch analysis regulations. Figure 3 shows that two heat exchangers have been added above the Pinch and other two have been added below the Pinch Temperature. The unsatisfied streams after adding the possible heat exchangers have been supplied using external utilities. Utilities selection criteria have been applied for minimising the overall cost of the process. The HEN design has nearly achieved the targets of integration with 1.409 x10^7 kJ/hr and 2.158 x10^7 kJ/hr for heating and cooling required energies, respectively. Table 3 shows the comparison between

original, literature and integrated processes energy required and the energy saving percentage between the literature and integrated processes.

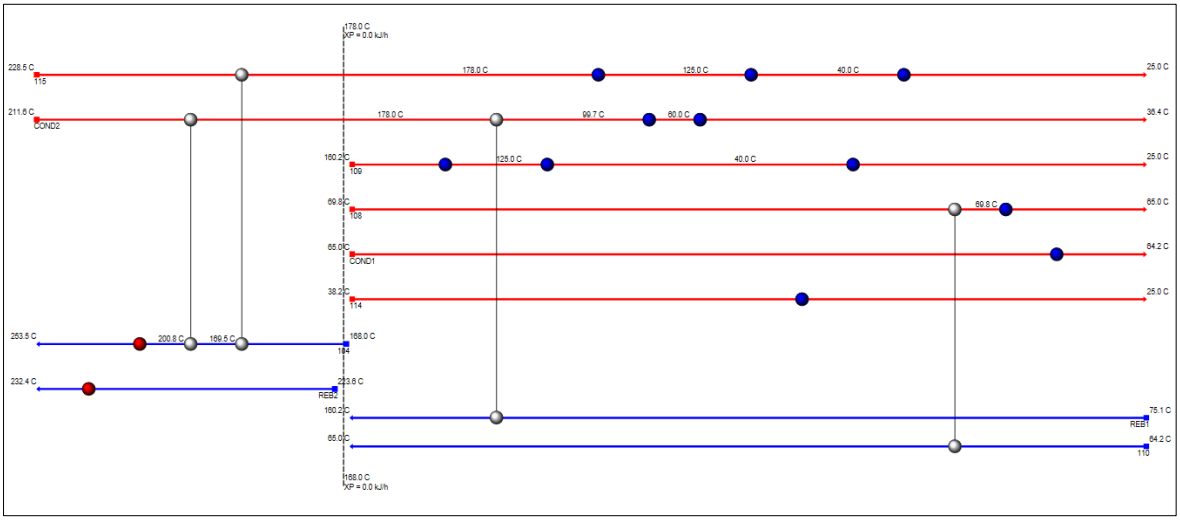

Figure 3: Heat exchanger network designed for the integrated process

Table 3: Comparison between original, literature and integrated processes

Process Type	Original	Literature	Integrated	% Saving
Heating (kJ/h)*10^7	2.56	2.08	1.409	32.3
Cooling (kJ/h)*10^7	3.31	2.83	2.158	23.8

4. Conclusions

Production of biodiesel from WCO has been studied using supercritical methanol. A quadratic polynomial model has been developed showing an empirical relationship between biodiesel yield and reaction variables. Numerical optimisation has been applied minimising temperature, pressure and time while targeting to maximise biodiesel yield. The optimum biodiesel yield has been found to be 91% at M:O molar ratio of 37:1, 253.5 ºC, 198.5 bar and 14.8 min. The predicted optimum conditions have been validated experimentally. Kinetic and thermodynamic data of the overall reaction have been studied. Simulation of a kinetic reactor based on the experimentally determined kinetic data has been achieved. Process design for biodiesel production has been simulated and compared with an existing process in the literature. HEN design has concluded energy savings of 32.3 % and 23.8 % for both heating and cooling required energy.

Acknowledgments

The authors acknowledge London South Bank University (LSBU) and The British University in Egypt (BUE) for funding the research.

References

Acevedo P., Cabeza I., Puello J., Benedetti E., 2016, Mobile plant for biodiesel production from jatropha seeds, in colombian caribbean regions, Chemical Engineering Transactions, 50, 283-288.

Farrag N.M., Gadalla M. A., Fouad M.K., 2016, Reaction parameters and energy optimisation for biodiesel production using a supercritical process, Chemical Engineering Transactions, 52, 1207-1212.

Ghoreishi S.M., Moein P., 2013, Biodiesel synthesis from waste vegetable oil via transesterification reaction in supercritical methanol, The Journal of Supercritical Fluids, 76, 24-31.

Lee S., Posarac D., Ellis M., 2011, Process simulation and economic analysis of biodiesel production processes using fresh and waste vegetable oil and supercritical methanol, Chemical Engineering Research and Design, 89, 2626-2642.

Saka S., Kusdiana D., 2001, Biodiesel fuel from rapeseed oil as prepared in supercritical methanol, Fuel, 80, 225–231.

Wen D., Jiang H., Zhang K., 2009, Supercritical fluids technology for clean biofuel production, Progress in Natural Science, 19, 273–284.