CHEMICAL ENGINEERING TRANSACTIONS

VOL. 29, 2012

A publication of AIDIC
The Italian Association of Chemical Engineering
Online at: www.aidic.it/cet

Guest Editors: Petar Sabev Varbanov, Hon Loong Lam, Jiří Jaromír Klemeš
Copyright © 2012, AIDIC Servizi S.r.l.,
ISBN 978-88-95608-17-4; **ISSN** 1974-9791

DOI: 10.3303/CET1229015

Energetic and Exergetic Optimization of an Organosolv-Biorefinery Process

Araceli García*, María González-Alriols, José A. Quijera, Jalel Labidi

Department of Chemical and Environmental Engineering, University of the Basque Country UPV-EHU, Plaza Europa 1, 20018, Donostia – San Sebastián, Spain
araceli.garcia@ehu.es

In the present work the energy and exergy efficiency of an organosolv biorefinery process has been evaluated. Based on experimental data obtained from ethanol – organosolv fractionation, a lignocellulosic biorefinery has been designed and simulated with Aspen Plus in order to obtain mass and energy flows, thermodynamic properties of the streams and the energy requirements of the process. These results have been used to develop the Heat Exchangers Network (HEN) optimization, through Pinch analysis with the HX-Net software, resulting in two improved HEN configurations that provided the minimum operating cost and the minimum capital cost, respectively. For the base-case and for the energy-optimized HEN configurations, an exergy analysis was carried out, taking into account the different stages of the proposed organosolv biorefinery process. Thus, in addition to the initial design energy optimization study, an assessment of the improvements on the use of energy provided by each new design was carried out.

1. The assessed organosolv-biorefinery process

The studied organosolv process consisted in the treatment of a non-wood raw material with a mixture of ethanol and water. In Figure 1 a diagram of the studied organosolv process is showed. The different inputs and outputs of the process are represented. Five main stages can be distinguished: (1) the reaction stage, where raw material is fractionated with a solvent at suitable temperature, pressure and time conditions, (2) the cellulosic solid fraction processing (washing), (3) liquid fraction ultrafiltration, where lignin fractions with narrow molecular weight distributions are obtained by using membrane technology, (4) the solvent (ethanol) recovery stage that includes the distillation process and (5) the water recovery stage, in which a high amount of water is recovered for subsequent reuse within the ultrafiltration stage. More details about the used process are reported in previous works (González Alriols et al., 2010; García et al., 2011).
The raw material (lignocellulosic biomass) is mixed with the solvent (ethanol-water, 60/40 w/w) in a pressurized reactor (160 ºC, 10 bar, 90 min, liquid/solid ratio: 6/1 w/w). Once reaction time is finished, the reactor is depressurized to 1 bar, and a flashed stream composed by ethanol and water is condensed and reused in the process. Two fractions are obtained from the reaction stage: the liquid and the solid fractions. The resulting solid fraction, mainly constituted by cellulose, is washed with the mixture of ethanol and water and filtrated. The rejected liquid fraction, containing dissolved hemicelluloses, lignin and remaining solvent, is mixed with the liquid fraction from the reactor and treated together to recover by-products and solvents. This stream is ultrafiltrated by using ceramic membranes in order to obtain different liquid fractions, which contain lignin with specific molecular weight distribution (González Alriols et al., 2010). The liquid fraction obtained after lignin precipitation is

Please cite this article as: Garcia A., González Alriols M., Quijera J. A. and Labidi J., (2012), Energetic and exergetic optimization of an organosolv-biorefinery process, Chemical Engineering Transactions, 29, 85-90

sent to the distillation unit, where a mixture of ethanol-water is obtained as distillate and recycled to the reaction unit. The residue, composed by water and co-products, mainly hemicellulosic sugars, is treated in order to obtain a clean water stream, which is sent back to the lignin precipitation stage, and a concentrated stream with the remaining process by-products for subsequent treatment and use.

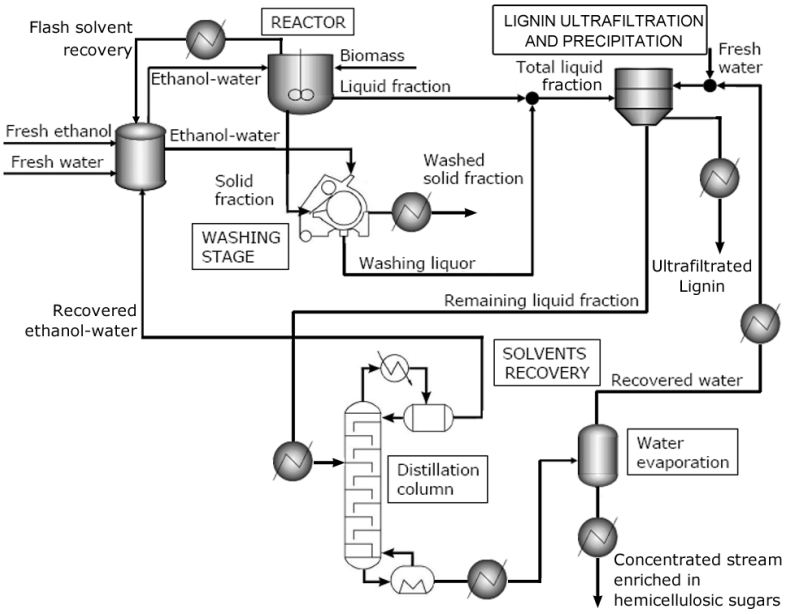

Figure 1: Process diagram of the studied organosolv-ethanol biorefinery process

1.1 Design and simulation of the studied process with Aspen Plus

Aspen Plus was used to design and simulate the process, on the basis of experimental results, in order to optimize solvent and water recovery and calculate mass and energy balances. Lignin, cellulose and hemicelluloses were defined by their chemical structure and physical properties which were obtained from the National Renewable Energy Laboratory (NREL), whereas other conventional components were selected from the ASPEN PLUS data bank. The NRTL-RK thermodynamic model was used to simulate the stream properties.

The simulation process was developed using the following inlet streams to the reactor: 1000 kg/h of dry raw material with the abovementioned composition and 6000 kg/h of ethanol-water (60 % w/w), which corresponded to a liquid/solid ratio (w/w) of 6. The raw material composition was defined as a typical lignocellulosic non-wood material composition: 45 % cellulose, 28 % hemicelluloses, 25 % lignin, 2 % inorganic compounds (% on a dry weight basis).

1.2 Optimization of the Heat Exchange Network (HEN) with HX-Net

Aspen HX-net software was used to design the optimised HEN designed related costs. Based on the energy balances and the utilities requirements (cold water and medium-low pressure steam) provided by the simulation, the process HEN was calculated (see Figure 2). The streams that needed to be heated and cooled were established as well as the temperature targets. For the HEN optimization, a ΔT_{min} of 5 ºC was selected. The hot and cold composite curves were obtained and two possible scenarios of an optimized HEN configuration were studied (for minimum operation and capital costs, IS1 and IS2, respectively).

1.3 Exergy balances in the organosolv process

Exergy expresses the loss of available energy due to the creation of entropy in irreversible processes (Hepbasli, 2008; Panapoulos et al., 2006). For a process stream, the specific physical exergy $\bar{e}$ (kJ/mol) is determined as follows:

$$\bar{e} = (h - h_0) - T_0 \cdot (s - s_0) \quad (1)$$

where h, T and s are the enthalpy (kJ/mol), temperature (K) and entropy (kJ/K mol) respectively, and the subscript 0 denotes the property under standard conditions (298.15 K and 1 atm). Considering the molar flow of each stream, N (mol/s), the exergy flow of a stream can be determined

$$Ex = N \cdot \bar{e} \quad (2)$$

The exergy destruction associated to a process or equipment (Ex_{dest} in kW) is determined from the balance

$$\sum Ex_{in} + \sum Q \cdot \theta = \sum Ex_{out} + Ex_{dest} \quad (3)$$

where the exergy input and output flows (Ex_{in} and Ex_{out}, respectively, in kW) are considered. The term Q·θ (kW) describes the exergy involved in heat exchange process, being Q the amount of heat exchanged (kW) and θ the Carnot factor, that depends on the outlet temperature from the process and the temperature at standard conditions:

$$\theta = 1 - \frac{T_0}{T} \quad (4)$$

The exergy balances were determined for each stage of the biorefinery process (reaction, separation/washing, ultrafiltration, solvent recovery and water recovery), as well as for the three proposed scenarios (base case, and minimum operation and capital costs configurations).

2. Results

2.1 Energy balances and HEN optimization

According to the mass balances performed by the process simulation, the proposed organosolv process had a fractionation yield of more than 52 % (w/w d.b), producing 28.4, 82.4, 115.6 and 317.02 kg/h of ultrafiltrated lignin (of 5, 10, 15 and greater than 15 kDa, respectively) and 399.3 kg/h of concentrated sugar-enriched liquid fraction (with 64 % of dry matter). The fresh ethanol and water requirements of the process were 470 and 550 kg/h, respectively. From the simulation of the proposed organosolv process the utility requirements for heating and cooling (10.98 MW and 12.20 MW, respectively) were also determined.

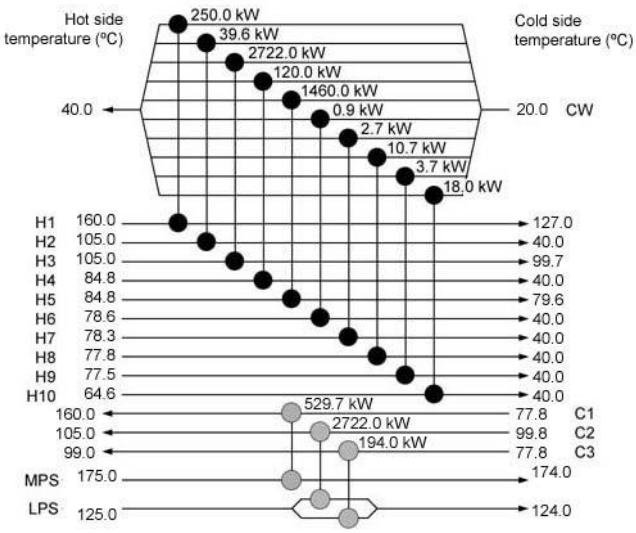

Figure 2: HEN configuration (temperatures and exchanged heat) for the studied biorefinery process (base case, BC).

In Figure 2 the HEN configuration of the base case (BC) is shown (the heat exchange conducted in the distillation column, i.e. the duty in the condenser and the reboiler, was not considered for HEN optimization). The base case heat exchange configuration resulted in a utility consumption of 3.45 and 6.78 MW for heating and cooling purposes, respectively. This configuration (with 13 heat exchange units), and the associated energy requirements, gave a operation and capital costs of 260 and 220 k€/year, respectively (see Table 1).

Table 1: Utilities requirements and associated costs for the three analyzed HEN scenarios.

	Units	BC (*base case*)	IS1 (*min. operation cost*)	IS2 (*min. capital cost*)
Heating	MW	3.45	2.25	2.39
Cooling	MW	6.78	3.43	3.57
Number of units		13	20	18
Heating cost	k€/year	210	141	146
Cooling cost	k€/year	45	23.1	241
Operating cost	k€/year	260	161	175
Capital cost	k€/year	220	321	296

Figure 3 shows the HEN configuration for the two optimized scenarios, calculated through HX-Net software, and in Table 1 the associated utilities requirements and costs are displayed. The IS1 scenario (for a minimum related operation cost) achieved a decrease of 35 and 49 % in heating and cooling utilities consumptions, respectively, whereas the IS2 scenario (for a minimum related capital cost) allowed a reduction of 31 and 47 % in the steam and cooling water requirements. Both improved scenarios needed a high number of heat exchange units (20 for the IS1 and 18 for the IS2).

2.2 Exergy balances of the proposed scenarios

The balanced exergy destruction in each stage of the studied process scenarios (BC, IS1 and IS2) was determined according the Equation 3. In the three proposed HEN configurations (detailed in Figures 2 and 3) very low exergy irreversibilities were found in separation/washing and ultrafiltration stages, being 0.04 and 2.66 kW respectively. In these stages no variations occurred when the HEN optimization was performed because the associated heat exchange units were not modified.

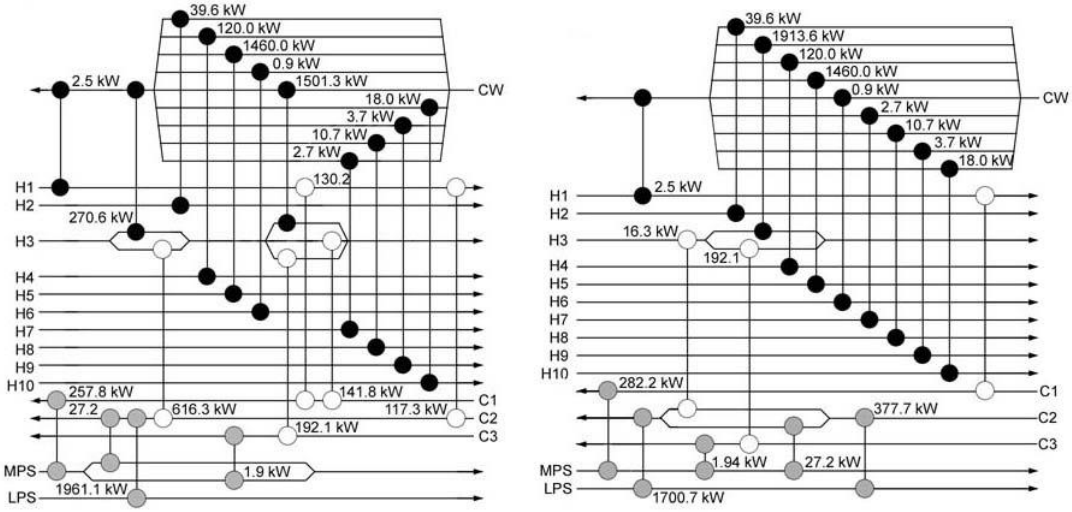

Figure 3: HEN scenarios for the minimum operation cost configuration (IS1 in left) and for the minimum capital cost configuration (IS2 in right).

However, the exergy destruction observed in reaction, solvent and water recovery stages decreased for both improved HEN configurations. In Figure 4 (left) the balanced exergy destruction for the three scenarios is shown. For the reaction stage in the base case an irreversibility of 124.14 kW was found (the negative sign denotes the high exergy destruction due cooling requirement), whereas IS1 and IS2 showed similar irreversibilities of 22.47 and 31.76 kW, respectively. In the solvent and water recovery stages a reduction of the destroyed exergy respect to the base case was observed in both improved scenarios (a decrease of 17 % in the solvent recovery stage and of 68-71 % in the water recovery stage).

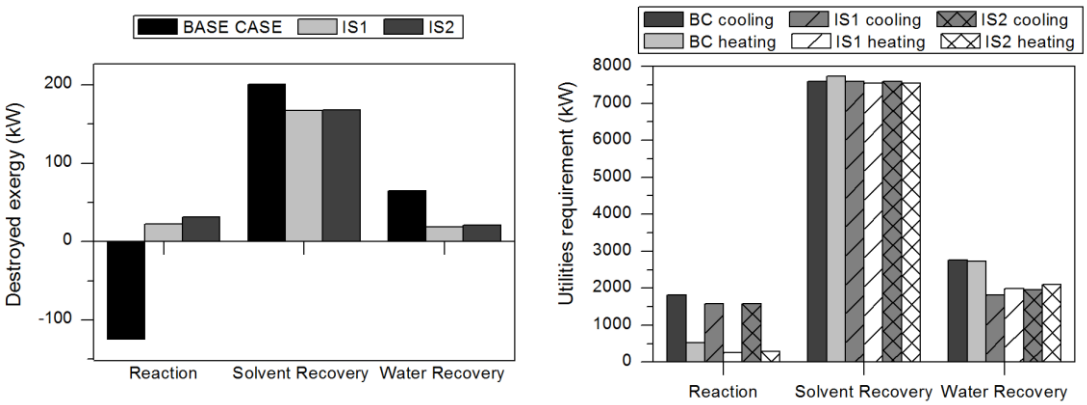

Figure 4: Balanced exergy destruction (left) and utilities requirements (right) in the reaction, solvent and water recovery stages of the assessed biorefinery process for the three analyzed scenarios (base case and improved HENs).

In Figure 4 (right) the utilities requirements in each stage of the studied scenarios are shown. The highest improvement in the utilities consumptions due HEN optimization was found in the reaction stage, with a decrease of 12 % for cooling requirements and of 47-51 % for heating requirements. The solvent and water recovery stages showed less noticeable reductions. With the improved HEN configurations a decrease of 2.5 % was achieved in the utilities requirement of the solvent recovery stage, whereas slightly higher reductions, between 23 and 34 %, were found in the utilities consumptions of IS1 and IS2 improved scenarios.
The use of process stream heat in the IS1 and IS2 HEN configurations avoided the use of external heating and cooling requirements, resulting in a more effective utilities consumption of the assessed process. Furthermore, the use of internal heat (from different streams in the process) allowed to reduce the irreversibilities of the different process stages.

3. Conclusions

In the present work, process simulation and optimization tools were used to optimize an organosolv biorefinery process from an energetic and economic point of view. The study promoted two alternative HEN configurations that allowed a reduction of more than 30 % in the utilities consumption which resulted in a reduction of the heat exchange related costs. In addition, an exergy analysis of the proposed configurations revealed that the use of internal heat (process streams) in the heat exchange network decrease the balanced exergy destruction, and thus the irreversibility of the process. Therefore, the improved biorefinery processes resulted more energetically efficient.

4. Acknowledgements

Authors would like to thank the Department of Agriculture, Fishing and Food of the Basque Country (scholarship of young researchers training), and the Spanish Ministry of Science and Innovation (CTQ2010-19844-C02-02 for supporting this work.

References

González Alriols M., García A., Llano-Ponte R., Labidi J., 2010, Combined organosolv and ultrafiltration lignocellulosic biorefinery process, Chem. Eng. J. 157, 113-120.

García A., González Alriols M., Llano-Ponte R., Labidi J., 2011, Energy and economic assessment of soda and organosolv biorefinery processes, Biomass Bioenerg. 35, 516-525.

Hepbasli A., 2008, A key review on exergetic analysis and assessment of renewable energy resources for a sustainable future. Renew. Sustain. Energy Rev. 12, 593-661.

Panapoulos K.D., Fryda L., Karl J., Poulou S., Kakaras E., 2006, High temperature solid oxide fuel cell integrated with novel allothermal biomass gasification. Part II: Exergy analysis, J. Power Sources 159, 586-594.